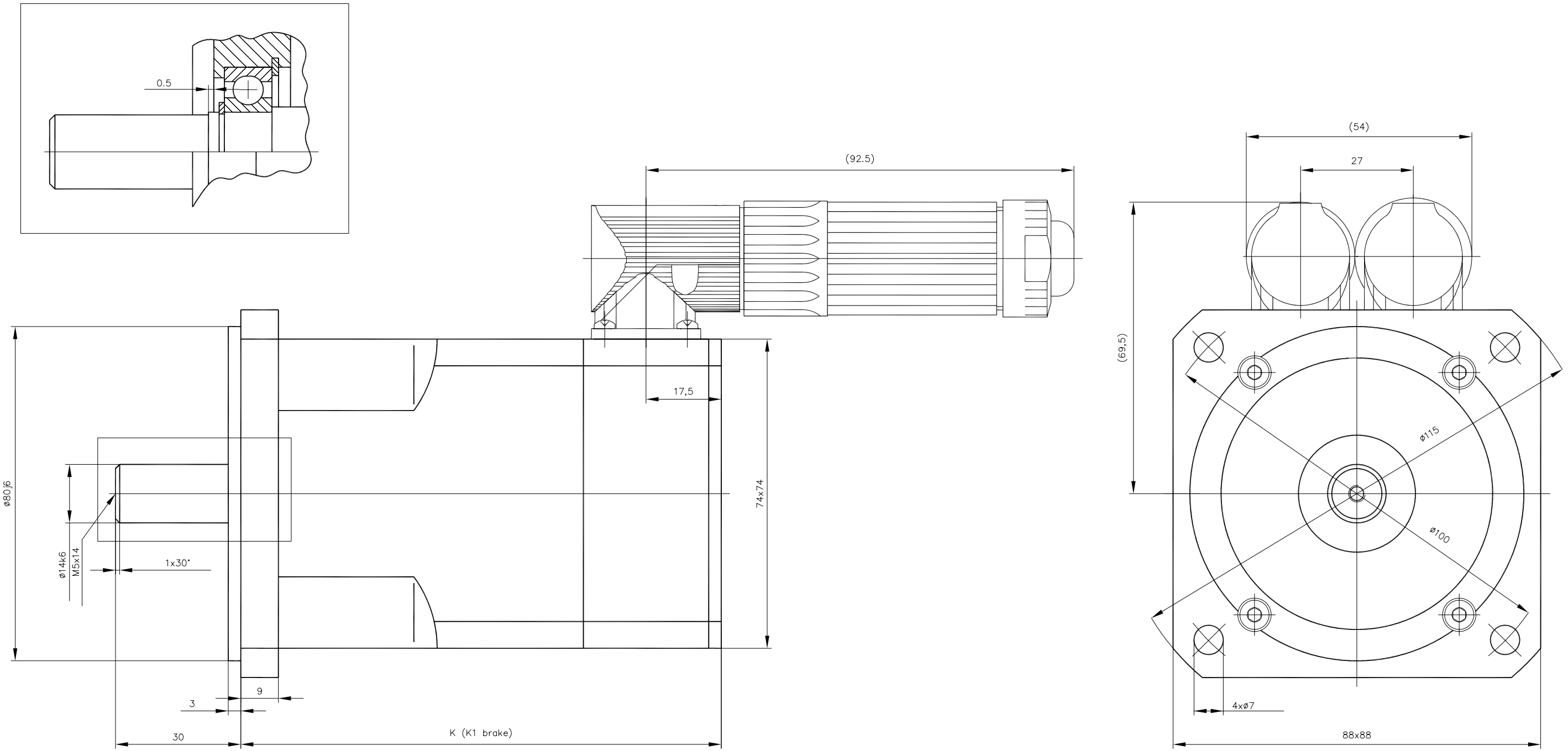

TYP	K	K1
6SM47L	188	221

mounting screws ISO 4762 – M6x60